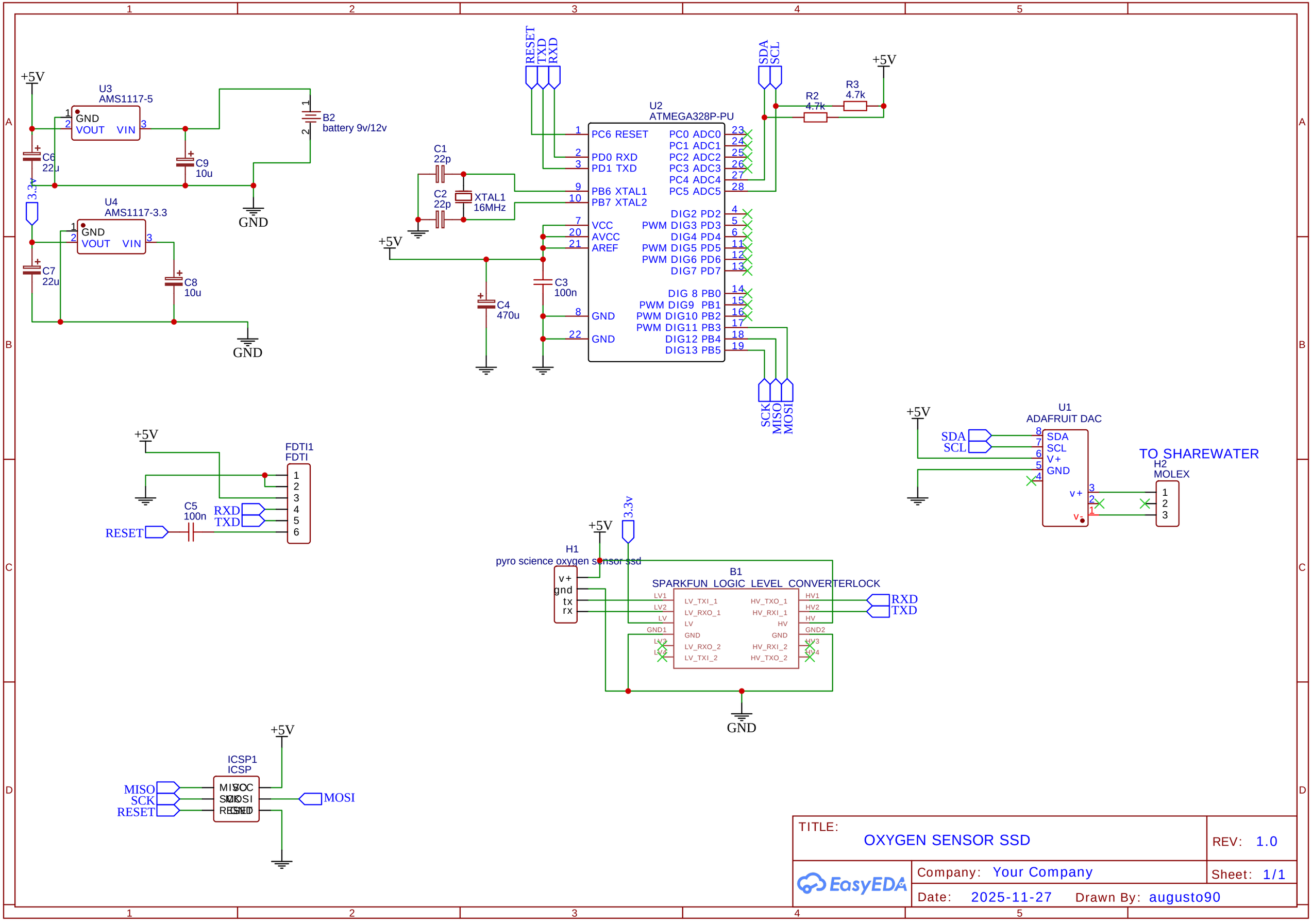


| | |
|---|---|
| TITLE: OXYGEN SENSOR SSD | REV: 1.0 |
| Company: Your Company | Sheet: 1/1 |
| Date: 2025-11-27 Drawn By: augusto90 | |